APPROVED BY:

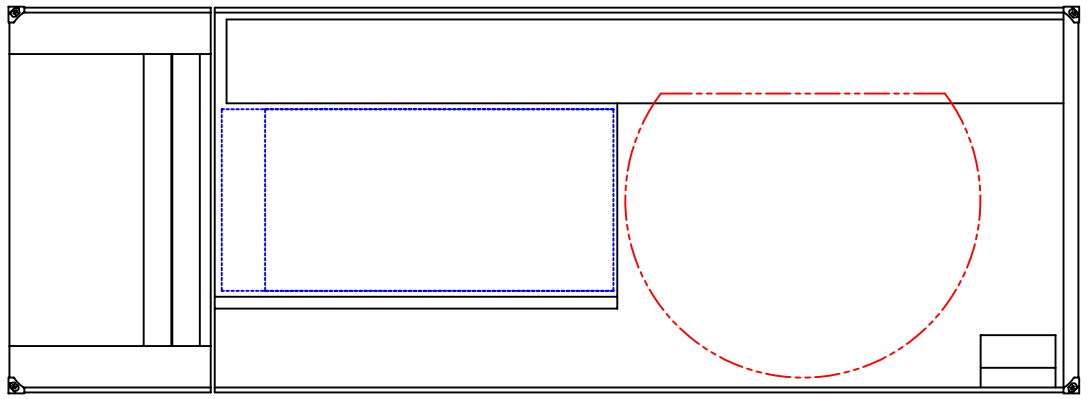

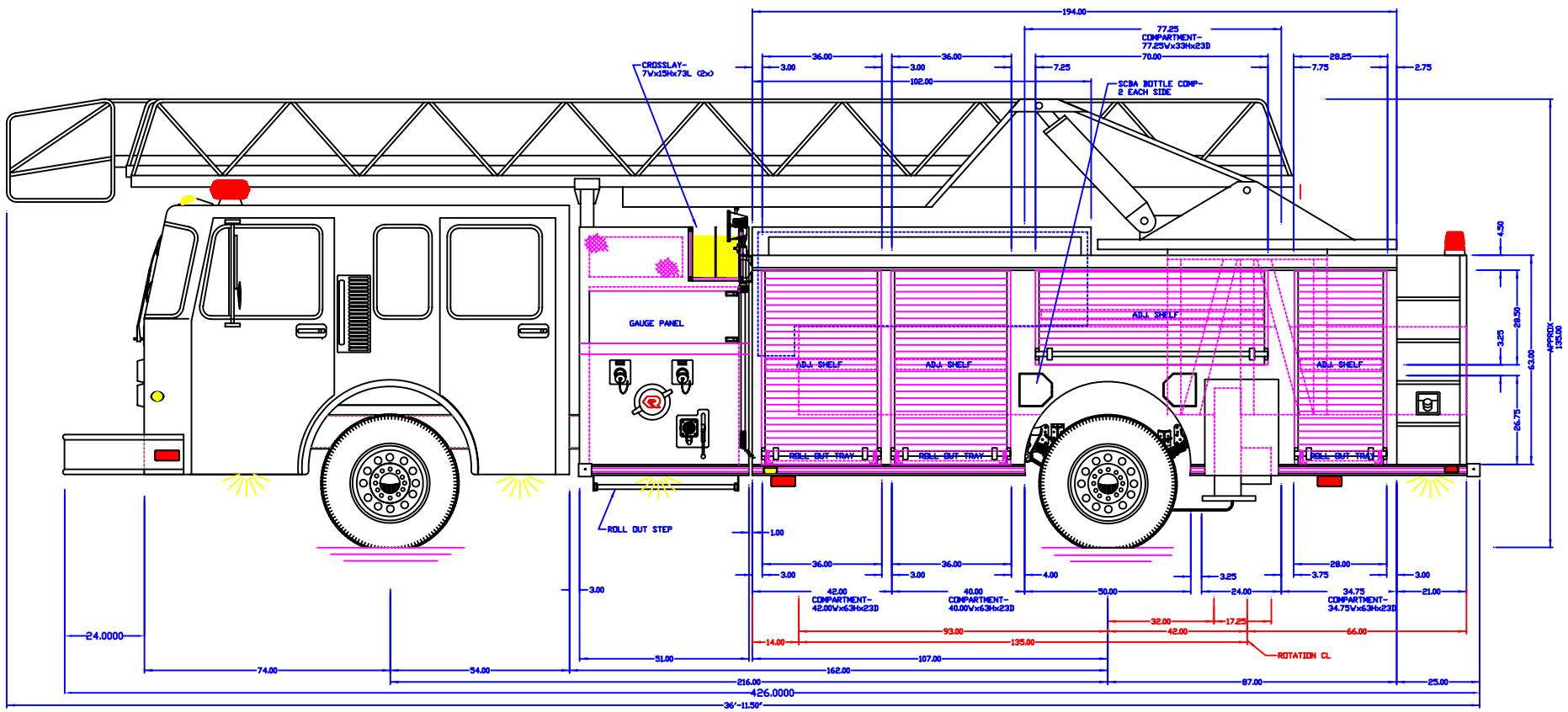

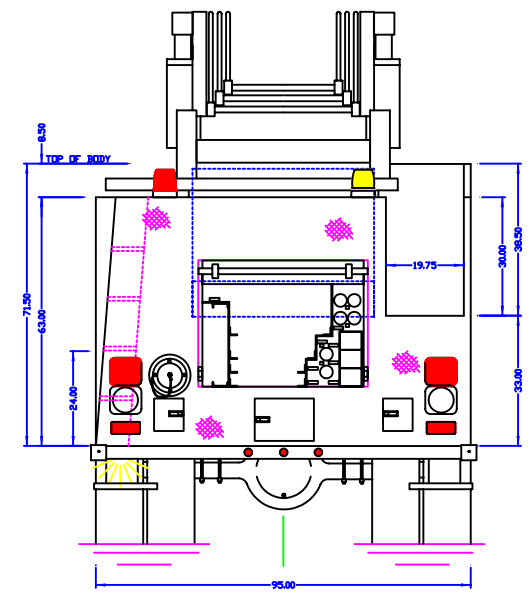

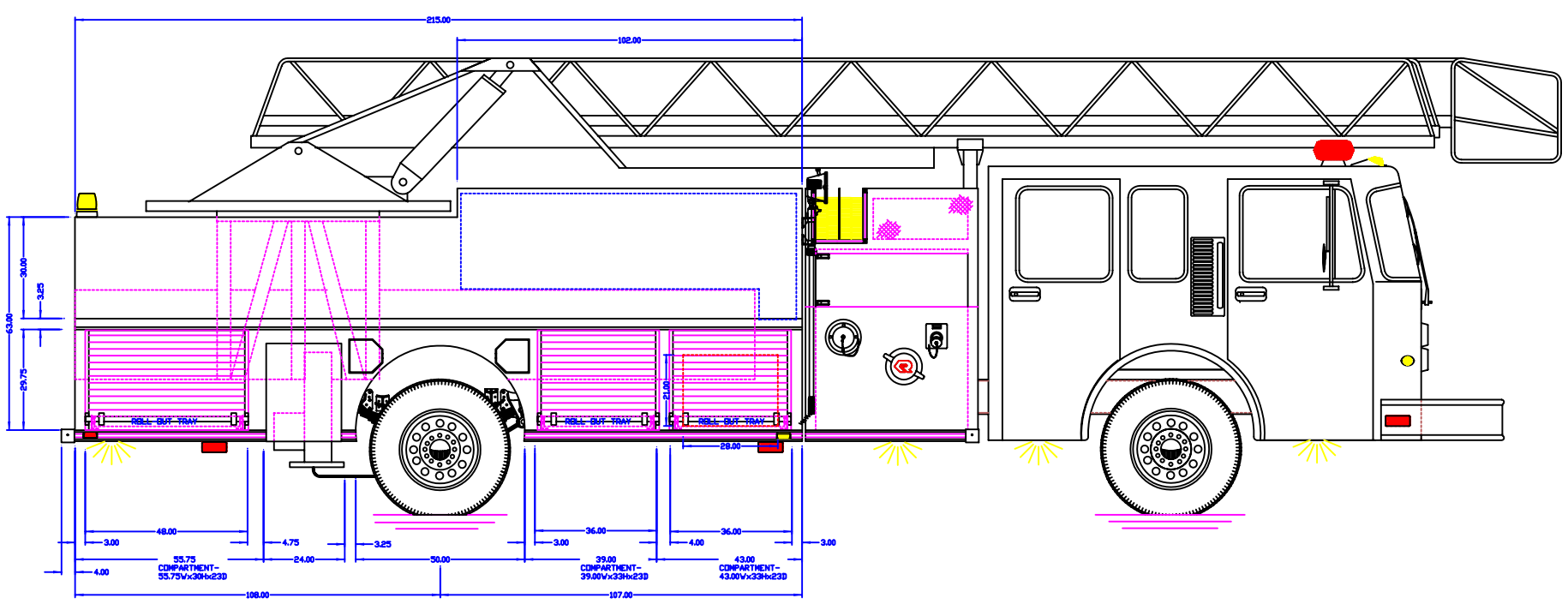

NOTE: LADDER- 75' RK MFG

TANK CAP- 400 GAL POLYPROPYLENE

PUMP CAP- WATEROUS 1500 GPM

DIMENSIONS SHOWN ARE APPROXIMATE AND ARE SUBJECT TO MINOR DEVIATIONS DURING CONSTRUCTION

NOT ALL ITEMS IN SPECS ARE SHOWN ON THIS PRINT

COMPARTMENT INTERIORS SPATTER PAINT

SIDE PUMP PANELS BLACK THERMOPLASTIC

NFPA UPPER LIGHT PACKAGE- CODE 3
NFPA LOWER LIGHT PACKAGE- CODE 3

HOSEBED-
82 CU FT MAXIMUM CAP
33 CU FT MINIMUM CAP
LOAD- UNKNOWN NFPA

NONE	MAXIMUM HEIGHT	BFN WLM	BFN TDK	BFN TDK
		DATE 09-27-05	REVISED 11-28-05	REVISED 12-6-05
NONE	MAXIMUM LENGTH	BFN MAG	BFN -	BFN -
		DATE 5-24-07	REVISED -	REVISED -
95"	BODY WIDTH			

rosenbauer

ROSENBAUER DEMO #7210
75-FT AERIAL

0 12" 24" SCALE: REF. ONLY

DRAWING NUMBER
7210DEMO